DuraMAC™ Vertical Multi-Stage Centrifugal Pumps

WATER PRESSURE BOOSTER SYSTEM

Manual - Variable Speed Booster Systems

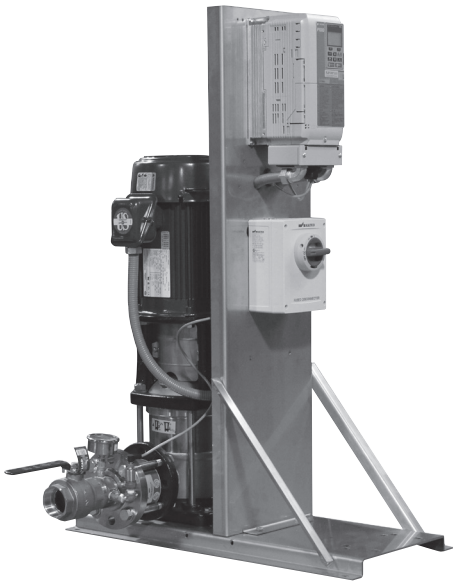

Simplex

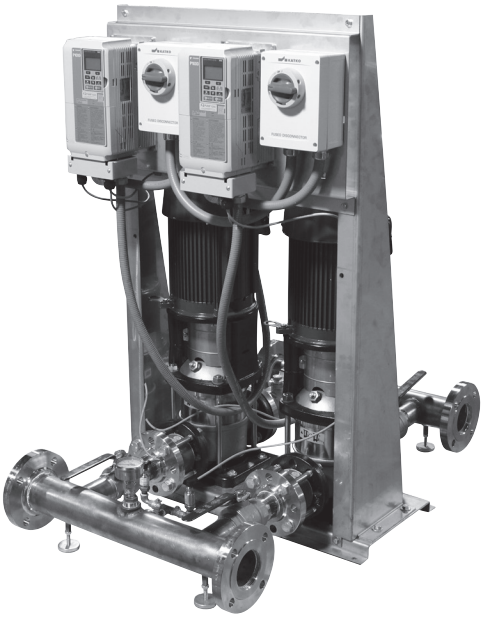

Duplex

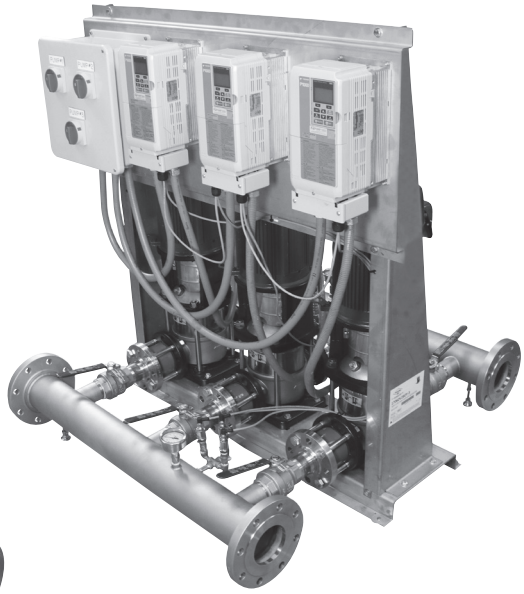

Triplex

ATTENTION!

Important information for installers of this equipment!

This equipment is intended for installation by technically qualified personnel. Failure to install it in compliance with national and local electrical codes and with motor suppliers recommendations, may result in electrical shock or fire hazard, unsatisfactory performance, and equipment failure.

WARNING!

Serious or fatal electrical shock may result from failure to connect the motor, control enclosures, metal plumbing, and all other metal near the motor or cable, to the power supply ground terminal using wire no smaller than motor cable wires. To reduce risk of electrical shock, disconnect power before working on or around the water system.

WARNING: It is unlawful in **CALIFORNIA & VERMONT (effective 1/1/2010); MARYLAND (effective 1/1/2012); LOUISIANA (effective 1/1/2013) and the UNITED STATES OF AMERICA (effective 1/4/2014)** to use any product in the installation or repair of any public water system or any plumbing in a facility or system that provides water for human consumption if the wetted surface area of the product has a weighted average lead content greater than 0.25%. This prohibition does not extend to service saddles used in California, Louisiana or under USA Public Law 111-380. **WARNING:** This product can expose you to chemicals including lead, which is known to the State of **CALIFORNIA** to cause cancer and birth defects or other reproductive harm. For more information go to: www.P65Warnings.ca.gov.

Table of Contents

1. Installation **2**
1.1 Mechanical 3
1.2 Electrical 3
1.3 Priming 3

2. Programming Functions **4**
2.1 Getting Started 4
2.2 Home Screen 4
2.3 Change Setpoint 5
2.4 Alarms and Faults 5
2.5 How to Change Parameters 5
2.6 Start / Draw Down Level 6
2.7 Sleep Boost 6
2.8 Automatic Restart 6
2.9 High Discharge Pressure 7
2.10 Low Discharge Pressure 7
2.11 Low Suction Pressure 8
2.12 Backup Parameters 9
2.13 Reset Parameters to Factory Default 9

3. Troubleshooting **10**
General Troubleshooting 10

4. Wiring Diagrams **11**
4.1) Simplex 230V Single Phase 11
4.2) Duplex 230V Single Phase 12
4.3) Simplex 230V Three Phase 13
4.4) Duplex 230V Three Phase 14
4.5) Triplex 230V Three Phase 15
4.6) Simplex 460V Three Phase 16
4.7) Duplex 460V Three Phase 17
4.8) Triplex 460V Three Phase 18

1. Installation

DuraMAC™ booster systems are shipped in a wooden frame/cardboard box and are designed to be lifted from the bottom by fork truck only. Care should be taken when unboxing the system to prevent damage. Any shipping damage should be reported to the shipping carrier and local product dealer. Claims for shipping damage must be made through the shipping carrier.

Check system nameplate and verify that the model number is correct. Also confirm that voltage, phase, and horsepower are accurate. For maintenance of the pump and/or motor, see instruction sheet 3210-528, DuraMAC™ Vertical Multi Stage Centrifugal pumps.

1.1 Mechanical

Do not lift pump system by the motor eyebolts or the intake/outlet manifolds. Use lifting straps suitable for the system weight. Straps should be secured around the pump or system base. Use Caution.

The booster system must be installed in a well ventilated area without excess dust or moisture. The booster system should be bolted directly to the floor using the supplied base holes. If noise and vibration is a concern, the booster system can be mounted using a rubber gasket between the floor and base.

Expansion joints can help reduce noise and vibration transmitted through the outlet piping to the downstream user. In addition, expansion joints can reduce the stress on suction and outlet piping associated with system misalignment during installation.

The suction and outlet piping should be of similar size of the booster system. On Duplex systems, either end of the manifold may be used. The unused end should be capped using a flange cap.

A diaphragm pressure tank is required on the outlet piping close to the pump. Sizing of the tank is dependent on the flow capacity of the system. A good rule of thumb is the tank size should be a minimum 25% of the maximum flow of the system. For example, a duplex system with a maximum flow of 240 gpm should use a minimum 60 gallon tank. The tank pressure should be 15 psi below the set point.

1.2 Electrical

All electrical connections and installation must be carried out be a licensed electrician in accordance with all national and local codes and regulations.

The electrical supply should match that as stated on the booster system label. See wiring diagrams in section 3 for electrical connections, minimum wire sizes, and fuse types.

1.3 Priming

- Flooded Suction Systems

- Flooded suction systems have either an incoming supply pressure or an elevated holding tank. Ensure that all suction valves are open and that the pump discharge valve is closed. Open the small vent plug on top of the pump. Air and spurts of water will spray out. Close the vent plug when a steady stream of water is flowing.

- Suction Lift Systems

- Suction lift systems should have a foot check valve on the suction line at the water source. The pump discharge valve should be closed at this time. A fill point near the pump system inlet is recommended to ensure the entire suction line can be filled with water. Remove the large vent plug on the pump(s) and fill completely with water. Replace vent plug and ensure entire inlet piping is pressure tight.

- System Priming

- The system may now be primed by starting the Yaskawa drive in HAND mode and slowly opening up the discharge valve(s). Do not fully open the discharge valve until all the air has been purged from the lines. After all system lines have been filled with water, the discharge valve may be completely opened. The system may now be started by pressing the AUTO key.

Do not operate against a closed discharge valve for more than three minutes as pump overheating and damage may occur.

2. Programming Functions

2.1 Getting Started

The Yaskawa iQpump 1000 drive features powerful software combined with an internal PLC to deliver multiple features that are designed help protect the drive, pump, motor, and entire pumping system. While many of these features are factory programmed and set, many features depend on the specific pumping application and may be required to be set during install.

Changing certain parameters while the drive and pump are running may cause unwanted behavior. It is recommended to turn the drive off OFF before changing parameter values.

2.2 Home Screen

To return to home screen, hold for ESC 3 seconds, or press F1. The display should look similar to the one below. Once at the home screen, additional drive status can be viewed by pressing F2. Additional drive information includes output frequency, current, voltage, DC bus voltage, and kilowatts.

Digital Operator Keypad

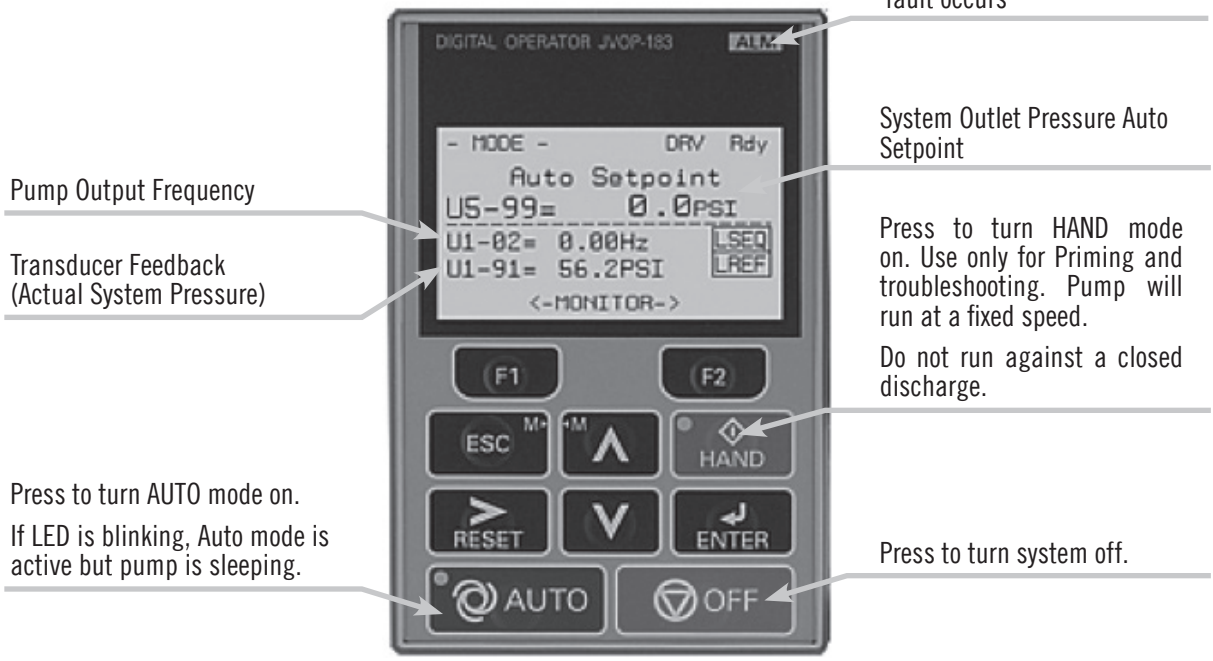

2.3 Change Pressure Set Point

Return to the Home Screen.

Press ENTER, and Setpoint 1 (Q1-01) should be displayed on screen. Use RESET to scroll to the correct digit and ∧ ∨ to change the setpoint value. Press ENTER to save the value and F1 to return to the home screen.

DUPLEX
TRIPLEX

This step must be performed on each drive for systems with multiple pumps. All drives must have identical set points.

2.4 Alarms and Faults

The iQpump 1000 drive features two levels of protection and warnings to the operator.

An ALARM allows the system to continue running, but displays a warning on the digital operator screen and flashes the red alarm LED.

A FAULT stops the drive, displays the time and type of fault, and lights the red alarm LED. For most faults, the drive will attempt to restart after certain time period or after the fault condition has been removed. After five restart attempts without a successful start, the drive will remain off in a fault mode until the problem is fixed.

To clear a fault and restart the system, press RESET, then AUTO. The pump will attempt to restart if all fault conditions have been cleared.

Note: Real time clock is used to log all fault events with a date and time stamp for system troubleshooting. By default, the time is set to Eastern Time EST (GMT – 5). To set the clock to local time, go to programming menu and modify parameter O2-17. The real time clock does not support daylight savings time.

2.5 How to Change Parameters

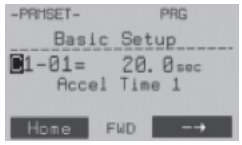

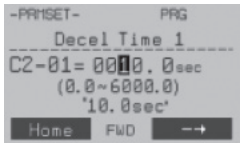

DUPLEX
TRIPLEX

From the home screen, use ∨ to access programming screen (screenshot left). Press ENTER to select.

Change to the desired parameter number by using the ∧ ∨ keys to change the selected character value, and ENTER to switch to the next character. Repeat for the next two number values to set the parameter number. To return to the previous character, press ESC.

Change the desired parameter value by using the F2 key to select the correct digit and the ∧ ∨ keys to modify the digit value. Press ENTER to save the changed value. Return to the home screen after all required parameters have been changed.

For systems with multiple pumps and multiple drives, all changed parameters should be identical on every drive. Parameters changed on one drive are NOT automatically changed on other drives. All modified parameters (including setpoint) must be changed on EACH drive to ensure correct operation of the system.

2.6 Start / Draw Down Level

The start/draw down level is the value at which the system will start the pumps to build pressure. This allows the system to sleep longer and prevent excessive cycling. If (P1-04) is positive, the system will start when the discharge pressure falls below this absolute value (P1-04) and after a delay (P1-05) has elapsed. If this value is a negative number (-P1-04), the discharge pressure must fall that amount below the setpoint before starting the system.

By default, the system will start when the discharge pressure drops 10 psi (P1-04) below the setpoint after delaying 1 second (P1-05).

If the Start/Draw Down Level is modified from factory defaults, the pressure tank air precharge must be set 5 psi below the start pressure. For example, a system with a 60 psi setpoint (Q1-01) and a -15 psi draw down level (P1-04), the tank precharge air pressure must be set at 40 psi. Ensure water pressure is zero when adjusting and measuring the precharge air pressure.

Parameter	Value	Name	Description
P1-04	-10 (psi)	Start / Draw Down Level	The system will start when the discharge pressure falls below this value when sleeping. If this is a negative number, the start point is this value amount below the setpoint. **RANGE:** (-999 to 999 psi)
P1-05	1 (s)	Start Level Delay Time	After the system discharge pressure falls below P1-04, the system will start after this time delay. **RANGE:** (0-3600)

2.7 Sleep Boost

This parameter sets the amount of pressure boost (P2-05) that will be applied to the system setpoint before going to sleep. This setting allows longer sleep times and less pump cycling.

By default, when the system goes to sleep, it will boost the system pressure by 5 psi (P2-05) above the system setpoint.

To disable sleep boost, set (P2-05) to 0.

Parameter	Value	Name	Description
P2-05	5 (psi)	Sleep Boost Level	The system will boost the outlet pressure by this amount before going to sleep. **RANGE:** (0-6000 psi)

2.8 Automatic Restart

In the event of a power supply loss or failure, the system is automatically programmed to restart once power has been restored. To disable this function, set (P4-10) to a value of 0:Disabled.

Parameter	Value	Name	Description
P4-10	1 Enabled	AMO PwDn- Storage	The system will automatically restart from a power failure once power is restored. The pumps may start automatically based upon need. **RANGE:** (0:Disabled, 1:Enabled)

2.9 High Discharge Pressure

When the discharge feedback signal rises above the high feedback detection level (P1-11) for a specified time (P1-12), the system will respond based on the actions in (P1-13).
By default, the drive will fault (P1-13) if the pressure rises above 150 psi (P1-11) for longer than 5 seconds (P1-12). The drive will attempt to restart (L5-41) if the pressure falls below the high feedback level.

Parameter	Value (Factory Set)	Name	Description
L5-41	1	High Feedback Retry	Determines if the drive will attempt to restart after a High Feedback Level Fault has occurred. **RANGE:** (0: No Retry, 1: Retry)
P1-11	*150 (PSI)	High Feedback Level	The iQpump will display a "High Feedback/Water (HFB/HW) alarm when pump output rises above this number. If the high feedback continues for the time period specified in P1-12, a fault will occur and the pump will stop **RANGE:** (0-6000 psi)
P1-12	5 (s)	High Feedback Level Fault Delay Time	Time period that the High Feedback Alarm must be activated before a fault occurs. **RANGE:** (0-3600 s)
P1-13	0: Fault	High Feedback Selection	Selects drive response when outlet pressure rises above High Feedback Level (P1-11) and High Feedback Delay Time (P1-12) has elapsed. **RANGE:** (0: Fault, 1: Alarm, 2: Digital Output)

*NOTE: Some higher pressure Variable Speed Booster Systems feature a 200 psi discharge transducer and gauge. These models will have the High Feedback Level (P1-11) factory set at 200 psi.

2.10 Low Discharge Pressure

When the discharge feedback signal falls below the low feedback detection level (P1-08) for a specified time (P1-09), the system will respond based on the actions in (P1-10).
By default, the drive will fault (P1-10) if the pressure falls below (P1-08) for longer than 10 seconds (P1-09). The drive will attempt to restart (L5-40) if the pressure rises above the low feedback level.
To disable the low outlet pressure, set (P1-10) to 1:Alarm.

Parameter	Value	Name	Description
L5-40	1	Low Feedback Retry	Determines if the drive will attempt to restart after a Low Feedback Level Fault has occurred. **RANGE:** (0: No Retry, 1: Retry)
P1-08	*10 (PSI)	Low Feedback Level	The iQpump will display a "Low Feedback/Water (LFB/LW) alarm when pump output falls below this number. If the low feedback continues for the time period specified in P1-09, a fault will occur and the pump will stop. **RANGE:** (0-6000 psi)
P1-09	10 (s)	Low Feedback Level Fault Delay Time	Time period that the Low Feedback Alarm must be activated before a fault occurs. **RANGE:** (0-3600 s)
P1-10	0: Fault	Low Feedback Selection	Selects drive response when outlet pressure falls below Low Feedback Level (P1-08) and Low Feedback Delay Time (P1-09) has elapsed. **RANGE:** (0: Fault, 1: Alarm, 2: Digital Output)

2.11 Low Suction Pressure

When the suction feedback signal falls below the minimum suction setpoint (Q5-03), the system will respond by slowing down the pump to maintain incoming pressure. If the suction pressure continues to fall below the minimum suction pressure (Q5-04) for a specified time (Q5-05), the system will respond by going to sleep. For multiple pump applications, all other pumps will also go to sleep mode. After the suction pressure has risen above the wake up pressure (Q5-06), the drive will restart the pump(s) automatically and return to normal auto operation.

By default, this feature is turned off. To enable this feature, set parameter (Q5-01) to 1: Enabled. The drive will slow down the pump(s) when the suction pressure reaches 10 psi (Q5-03). The system will go to sleep when the suction pressure falls below 5 psi (Q5-04) for more than 5 seconds (Q5-05). Once the suction pressure has risen above 10 psi (Q5-06), the drive will restart and return to normal operation. To disable the low suction pressure, set (q5-01) to 0:Disabled.

Parameter	Value	Name	Description
Q5-01	0	Suction Pressure Select	Sets the method of operation for the Suction Control / Vacuum Control Function **RANGE:** (0: Disabled, 1: Suction Pressure, 2: Vacuum {"Hg})
Q5-02	150 (PSI)	Suction Scaling	Sets the full scale of the 4-20 {mA} suction transducer that is connected to the analog input terminal A1. **RANGE:** (0-1200)
Q5-03	10 (PSI)	Minimum Suction Setpoint	The level below which the drive will slow down the pump(s) to try to maintain incoming pressure. **RANGE:** (0-1200 PSI)
Q5-04	5 (PSI)	Minimum Suction Pressure	The level below which the drive will go to sleep and turn off all other lag pumps. **RANGE:** (0-1200 PSI)
Q5-05	5 (s)	Suction Pressure Sleep Delay Time	Sets the length of time the drive will delay after the suction pressure falls below the minimum suction pressure (Q5-05) before the drive will go to sleep. **RANGE:** (0-3600 s)
Q5-06	10 (PSI)	Wake Up Pressure	Sets the pressure that the suction must rise above to restart normal pump operation. **RANGE:** (0-1200 PSI)

2.12 Backup Parameters

BACKUP

To save a backup of all parameters, set parameter o3-01 to value of 1. This will save the parameters to the digital operator keypad.

Parameter	Value	Name	Description
o3-01	1	Copy Select Inv>Op Read	Copies parameters from the drive and stores them on the Digital Operator Keypad

RETRIEVE

To reset drive parameters to the backup parameters, set parameter o3-01 to a value of 2. This will copy parameters from the digital operator keypad to the active drive parameters, overwriting any changes made to the drive parameters.

WARNING: Retrieving parameters from the digital operator keypad without first performing a backup will result in drive parameters being reset to the A.Y. McDonald factory default.

Parameter	Value	Name	Description
o3-01	2	Copy Select Op>Inv Write	Copies parameters from the Digital Operator Keypad and writes them to the drive as the active parameters

2.13 Reset Parameters to Factory Default

To reset parameters to the A.Y. McDonald factory default, set parameter (A1-03) to 1110: User Initialize

Parameter	Value	Name	Description
A1-03	1110	User Initialize 1110	Returns parameters to AY McDonald factory default values.

3. Troubleshooting

General Troubleshooting

Problem	How To Check	Solution
iQpump is on AUTO, green LED is blinking, pump is not running.	iQpump is sleeping.	System demand is low. Once the outlet pressure has fallen below the start/draw down level, the iQpump will start the pump.
Water is leaking from around motor/pump coupling	Turn system off. Remove motor coupling guards. Observe mechanical seal for leaks.	Replace mechanical seal. See Pump manual 3210-528.
Alarm light is blinking and Digital Operator Display indicates Alarm.	Review code and error displayed on screen. Take appropriate actions to fix the alarm problem.	If problem still persists, call factory for alarm troubleshooting.
Alarm light is lit and Digital Operator Display indicates Fault.	Review code and error displayed on screen. Take appropriate actions to fix the faults.	Turn power off to the system using the disconnect. Wait 20 seconds and turn power back on. Press the RESET key, and then press AUTO to restart the system. If the fault re-occurs, call factory for fault troubleshooting.

Problem: Pump is running but does not deliver water

Problem	How To Check	Solution
Bypass line/valve open	Locate bypass valve (if applicable) . Ensure valve is completely in the closed position	Close valve entirely.
Pump Isolation Valves are closed	Locate pump isolation valves located on the inlet and outlet of each pump. Both valve handles should in the open position	Open valves entirely (parallel with pump).
Pump may be air locked	Locate the purge port located on top of the pump. Loosen the smaller hex bolt slightly. Listen for air escaping.	Keep purge port open until all air has been evacuated and a steady stream of water is flowing. Close purge port.
Pump may have lost Prime	Check suction pipes, check valves, and foot valves for leaks.	Ensure suction piping is pressure tight. Replace check valves or foot valves as necessary. Re-prime as needed using the pump fill port.
Shaft Coupling loose	Turn system off and switch disconnect to “OFF” position. Remove shaft cover and inspect motor coupling.	If loose, refer to maintenance section of Manual 3210-528 for correct shaft coupling reassembly.
Motor operating in wrong direction	View motor direction from top. Motor should turn in direction of arrow on pump.	If backwards, switch any two motor leads at the drive. Ensure drive is off, power is removed, and charge indicator has been extinguished before removing terminal cover.

Problem: Pump short cycles or continues to run

Problem	How To Check	Solution
Pressure tank too small	Pressure tank size should a minimum 25% of total booster flow. A booster system delivering a maximum of 240 gpm should have a minimum tank size of 60 gallons.	Replace or add additional pressure tanks.
Incorrect air pressure in tank	For discharge or bladder captive air tanks, drain the tank of water and check the precharge air pressure. It should be 15 psi below the pressure setpoint.	Fill precharge air pressure in tank to specified value (ensure water pressure is zero). Replace tank if it will not hold air pressure.
Increase Start/Draw Down Level	Refer to Section 2.7. Sleep boost increases the setpoint pressure before putting the system to sleep.	Increase the (negative) valve of P1-04. The pressure tank precharge level may need to be adjusted.
Transducer valves closed or transducer piping blocked	Verify that pressure feedback (U1-91) on home screen matches discharge pressure gauge. If the two are more than 5 psi apart, ensure all test valves on transducers are open and there is no blockage in piping.	Open all test valves on transducer piping. Clear any blockage. If problem still persists, replace transducer.

4. Wiring Diagrams

The attached wiring diagrams show the electrical connections for various DuraMAC Variable Speed Booster Systems. Select the proper wiring diagram for the model you are installing. These wiring diagrams show factory installed wiring and are used for reference only. Use appropriate supply wire size for the rated current, voltage, and length of wire. Always use good wiring practices and follow all local and state wiring codes. Ensure all equipment is grounded properly.

The iQpump 1000 drive contains lethal voltages. Before removing the drive terminal cover, make certain that the disconnect power has been turned off AND the charge indicator light has turned off. The charge indicator may take several minutes to extinguish as the DC bus voltage is discharging.

4.1 Simplex 230V Single Phase

SIMPLEX
230V SINGLE PHASE 3 - 5 HP

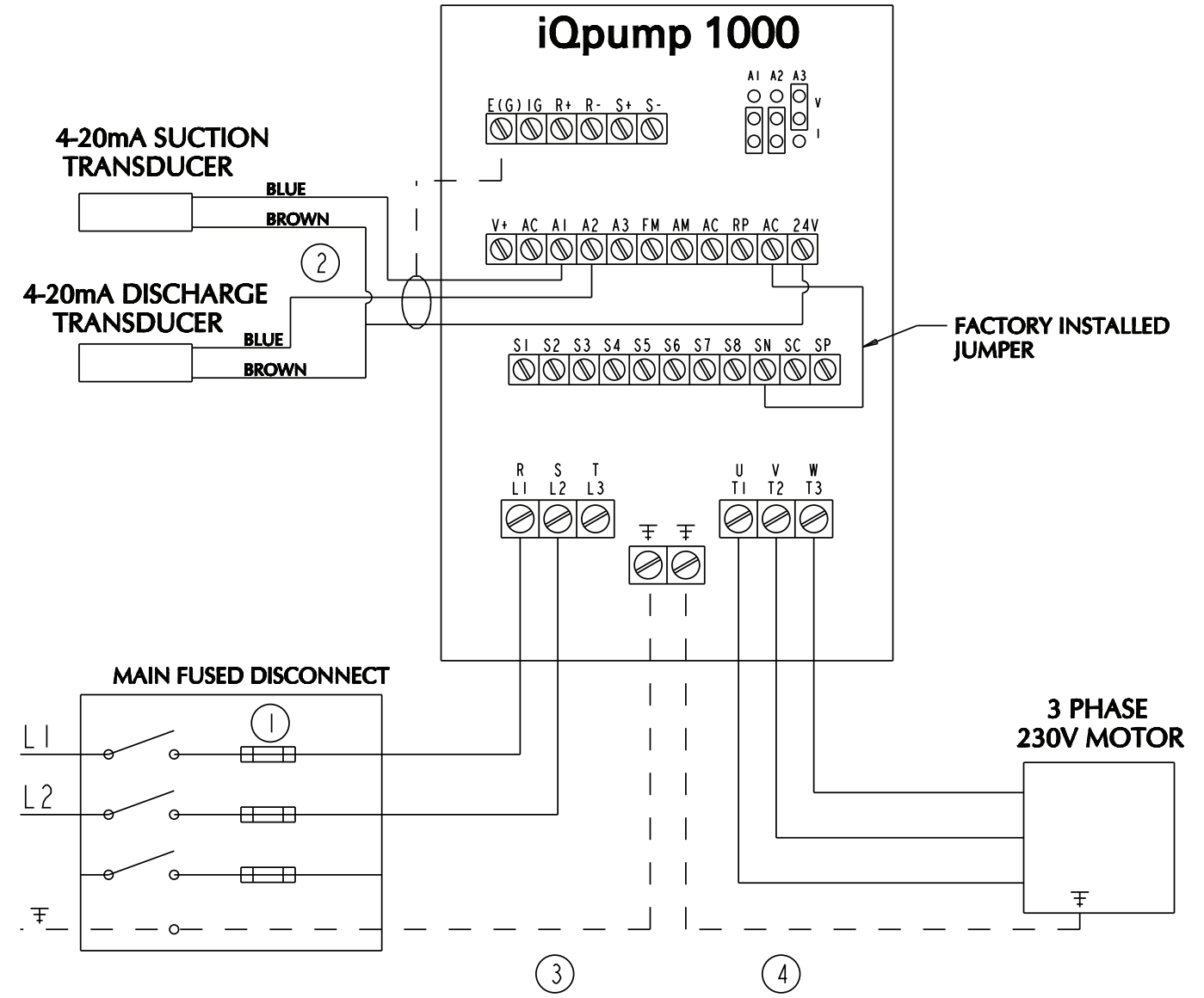

HP	Wire Size Supply	Wire Size Motor	FUSES
3	10 GA	10 GA	30A CC
5	8 GA	8 GA	60A J

Notes:
1) Time Delay Fuses (See Chart)
2) Shielded Transducer Cables
3) Supply Wire (See Chart)
4) Motor Wire (See Chart)

4.2 Duplex 230V Single Phase

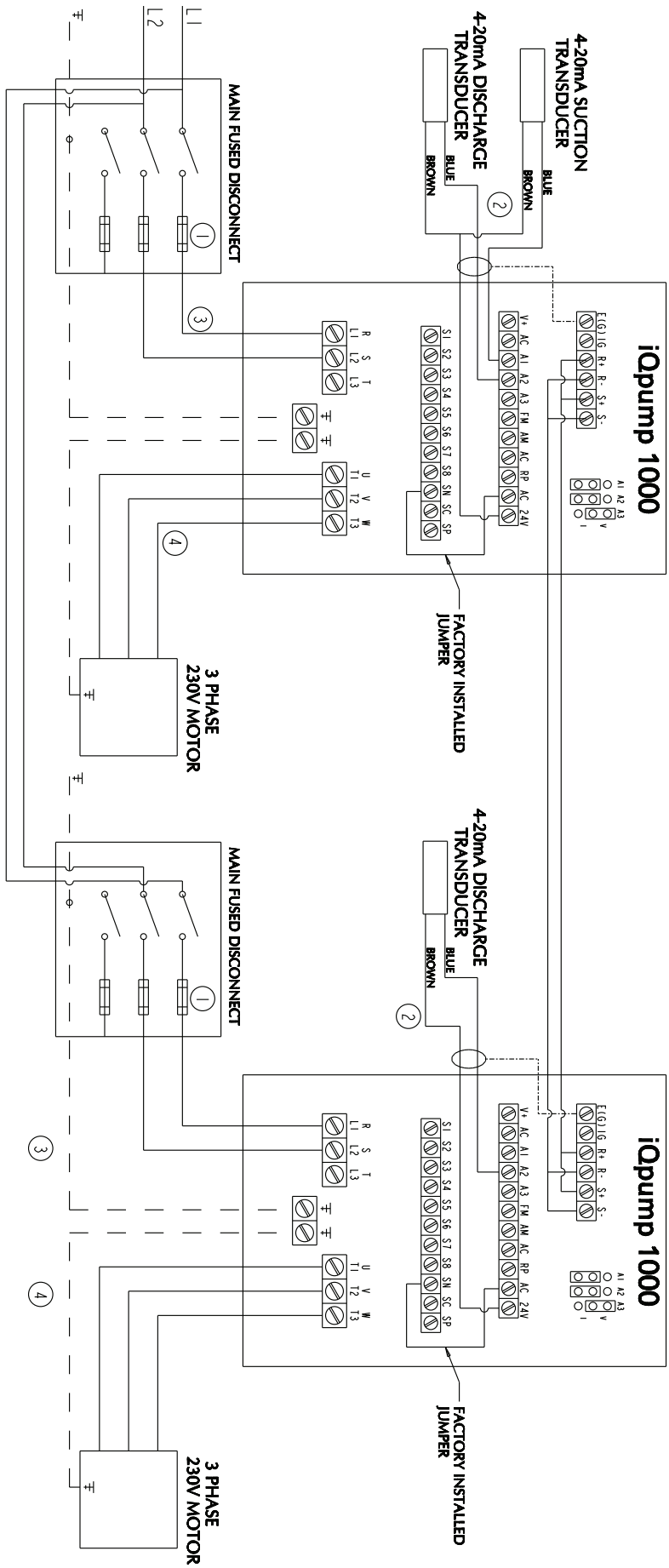

Wire Size

HP	Supply	Motor	FUSES
3	10 GA	10 GA	30A CC
5	8 GA	8 GA	60A J

Notes:

1) Time Delay Fuses (See Chart)
2) Shielded Transducer Cables
3) Supply Wire (See Chart)
4) Motor Wire (See Chart)

SIMPLEX
230V THREE PHASE 3 - 10 HP

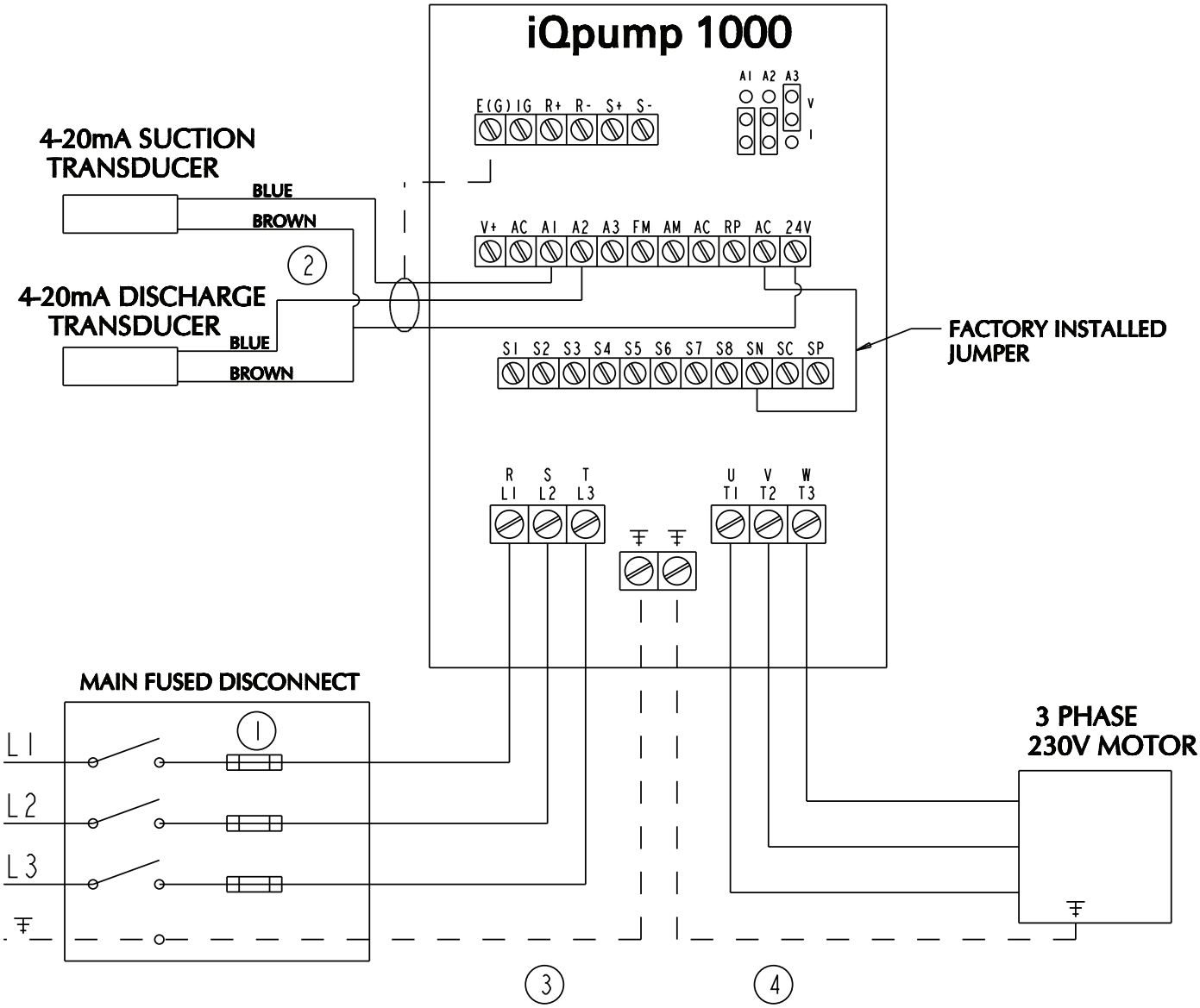

HP	Wire Size Supply	Wire Size Motor	FUSES
3	10 GA	10 GA	17.5A CC
5	10 GA	10 GA	30A CC
7.5	8 GA	8 GA	40A J
10	8 GA	8 GA	60A J

Notes:
1) Time Delay Fuses (See Chart)
2) Shielded Transducer Cables
3) Supply Wire (See Chart)
4) Motor Wire (See Chart)

4.4 Duplex 230V Three Phase

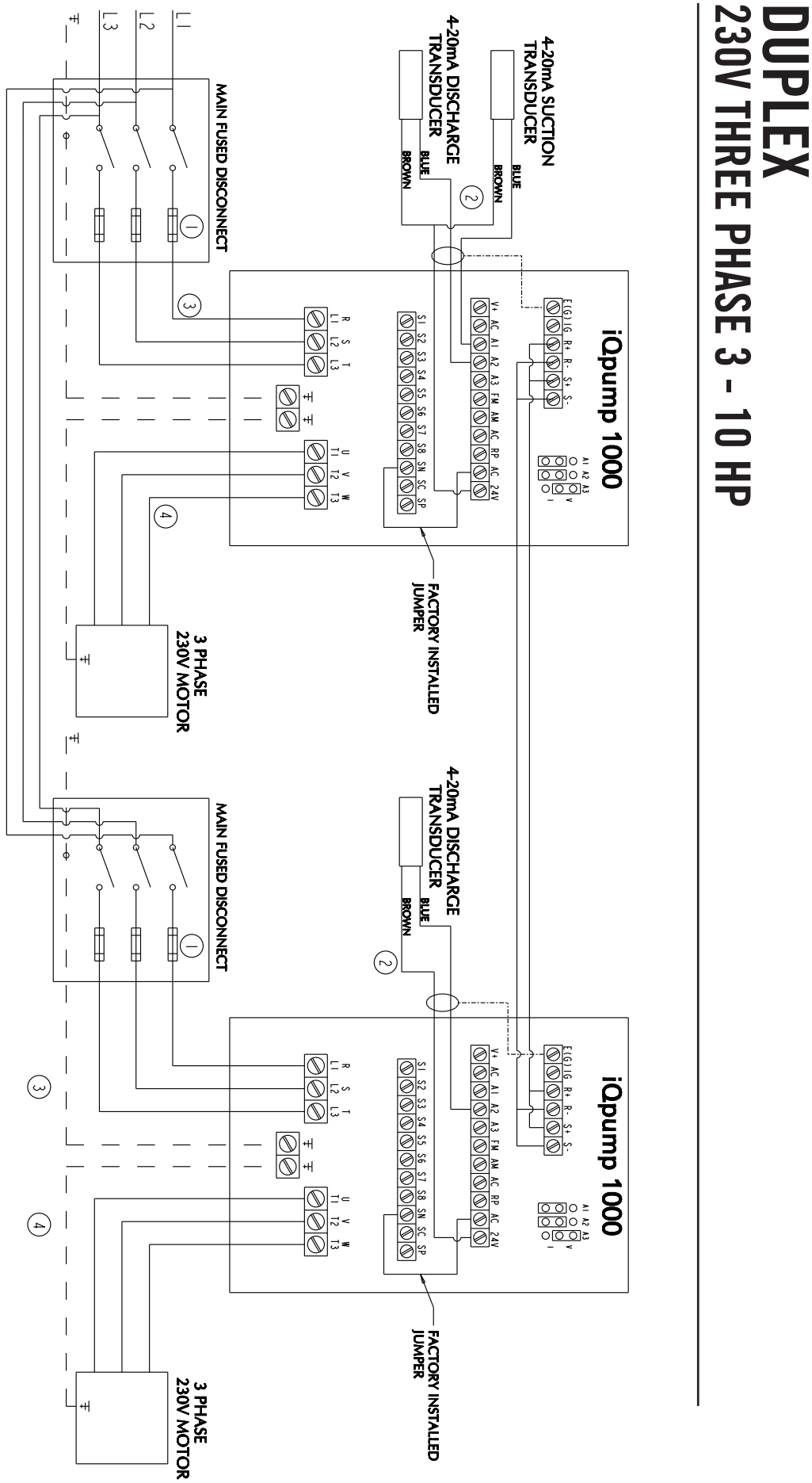

HP	Wire Size Supply	Wire Size Motor	FUSES
3	10 GA	10 GA	17.5A CC
5	10 GA	10 GA	30A CC
7.5	8 GA	8 GA	40A J
10	8 GA	8 GA	60A J

Notes:
1) Time Delay Fuses (See Chart)
2) Shielded Transducer Cables
3) Supply Wire (See Chart)
4) Motor Wire (See Chart)

4.5 Triplex 230V Three Phase

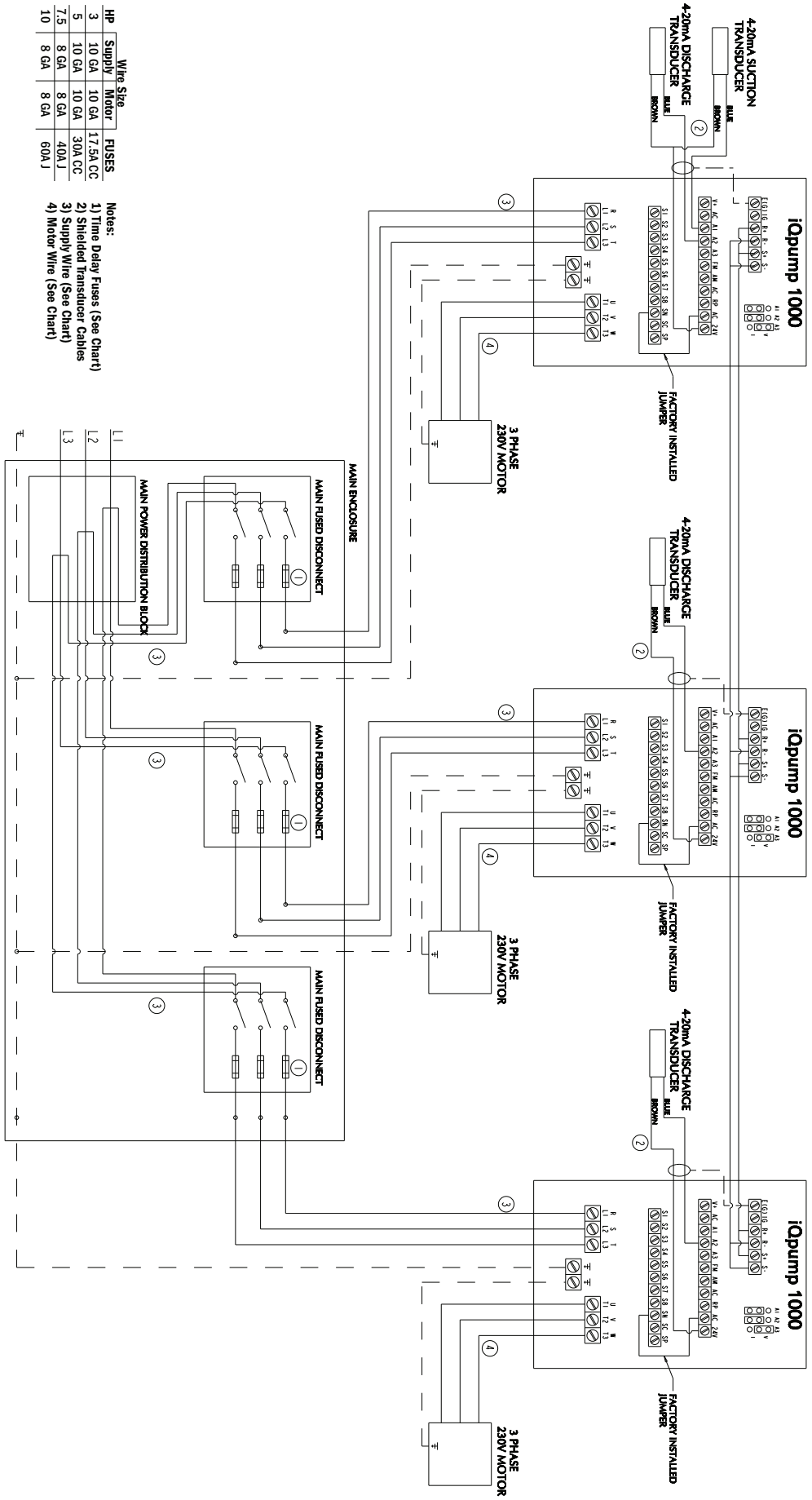

HP	Wire Size Supply	Wire Size Motor	FUSES
3	10 GA	10 GA	17.5A CC
5	10 GA	10 GA	30A CC
7.5	8 GA	8 GA	40A J
10	8 GA	8 GA	60A J

Notes:
1) Time Delay Fuses (See Chart)
2) Shielded Transducer Cables
3) Supply Wire (See Chart)
4) Motor Wire (See Chart)

SIMPLEX
460V THREE PHASE 3 - 10 HP

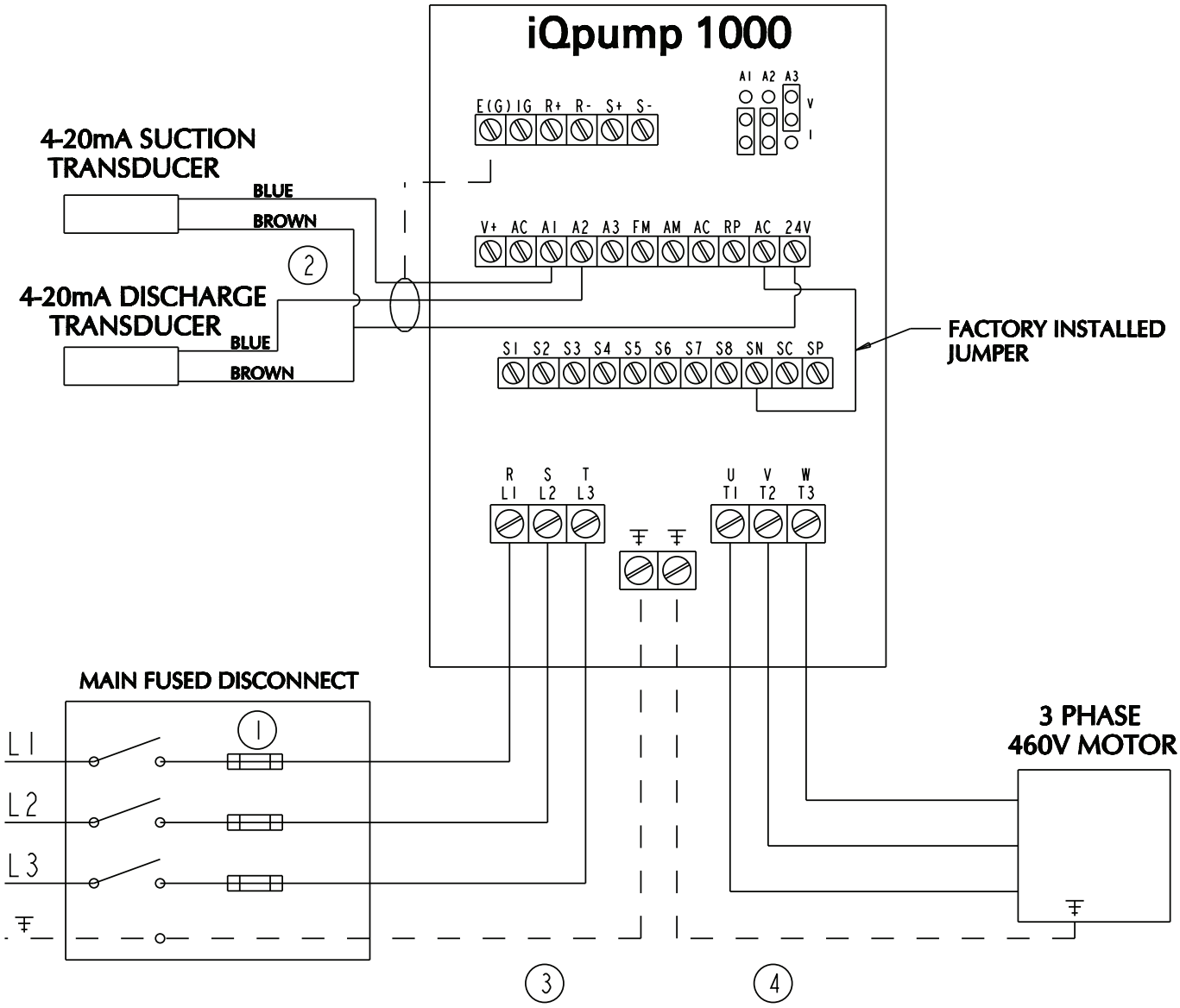

HP	Wire Size Supply	Wire Size Motor	FUSES
3	10 GA	10 GA	15A CC
5	10 GA	10 GA	15A CC
7.5	10 GA	10 GA	20A CC
10	10 GA	10 GA	30A J

Notes:
1) Time Delay Fuses (See Chart)
2) Shielded Transducer Cables
3) Supply Wire (See Chart)
4) Motor Wire (See Chart)

4.7 Duplex 460V Three Phase

DUPLEX
460V THREE PHASE 3 - 10 HP

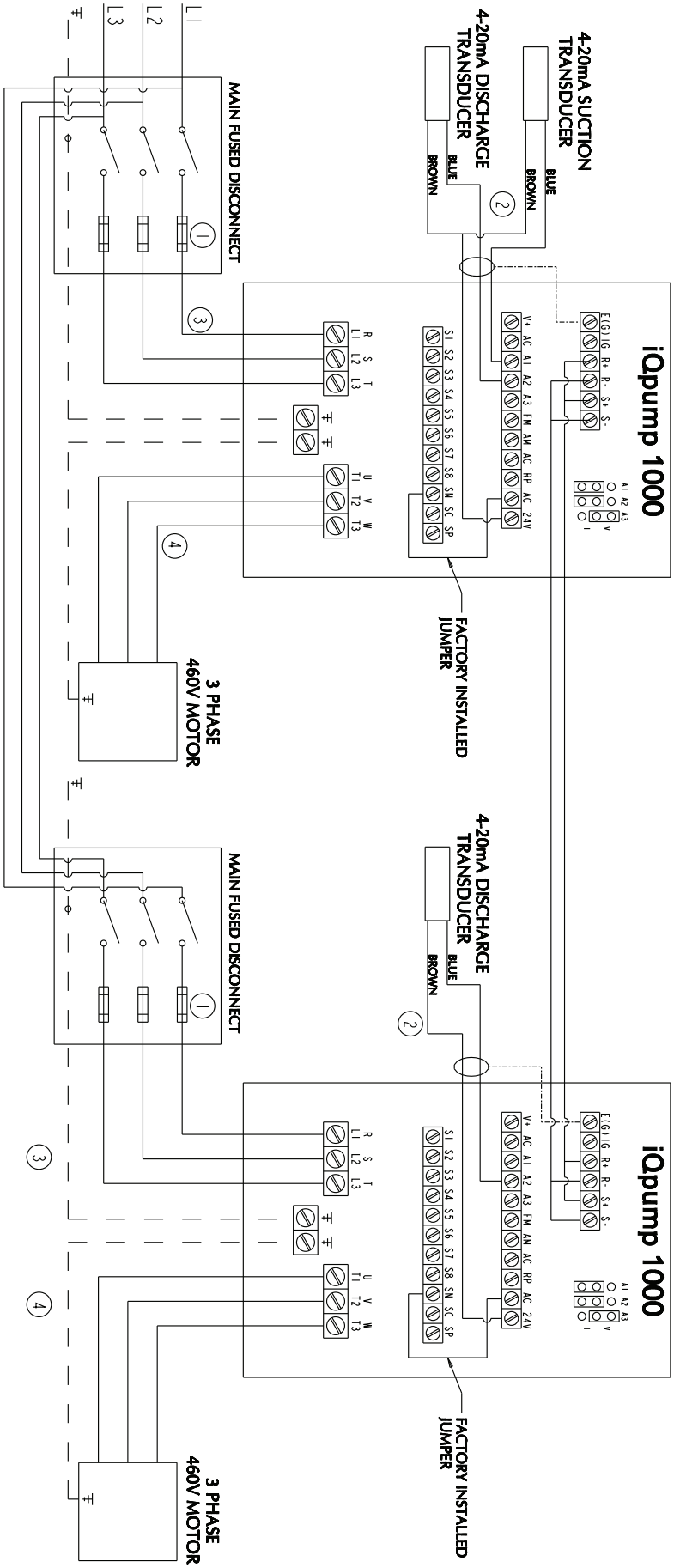

Wire Size

HP	Supply	Motor	FUSES
3	10 GA	10 GA	15A CC
5	10 GA	10 GA	15A CC
7.5	10 GA	10 GA	20A CC
10	10 GA	10 GA	35A J

Notes:

1) Time Delay Fuses (See Chart)
2) Shielded Transducer Cables
3) Supply Wire (See Chart)
4) Motor Wire (See Chart)

4.8 Triplex 460V Three Phase

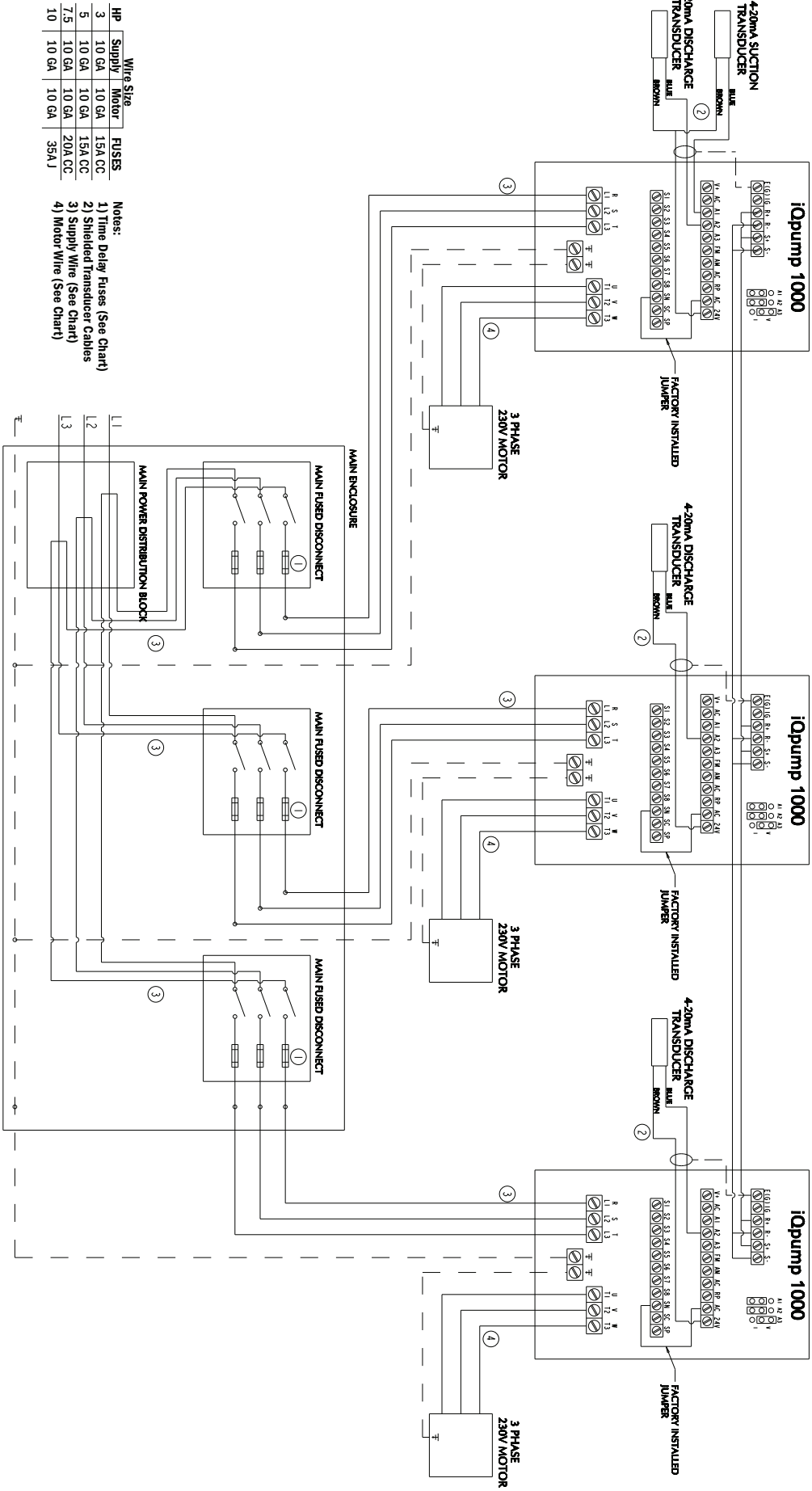

Wire Size			
HP	Supply	Motor	FUSES
3	10 GA	10 GA	15A CC
5	10 GA	10 GA	15A CC
7.5	10 GA	10 GA	20A CC
10	10 GA	10 GA	35A J

Notes:
1) Time Delay Fuses (See Chart)
2) Shielded Transducer Cables
3) Supply Wire (See Chart)
4) Motor Wire (See Chart)

Notes

Notes